REV.	ECN	DESCRIPTION	DATE	DRAWN BY	APPROVED
00	–	ORIGINAL ISSUE – RND# 000073	11/1/22	CK	DF
01	ECN000906	ADDED Cv VALUES TO DIMENSION CHART	12/5/22	CK	DF

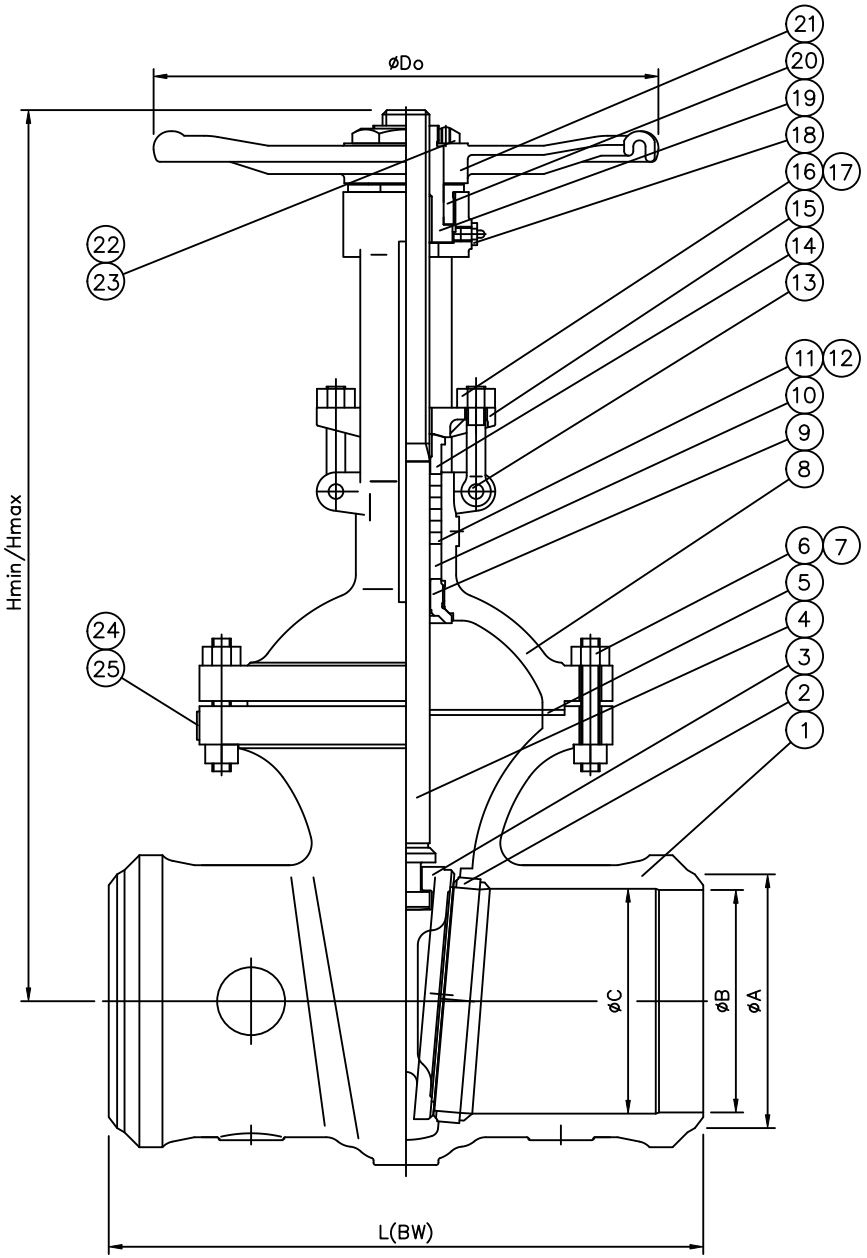

NO.	PART NAME	MATERIAL
1	BODY	A216 WCB
2	SEAT RING	ASTM A105+STL
3	WEDGE	A216 WCB+STL
4	STEM	A182 F6a
5	GASKET	304 SP. WOUND+GRAPHITE
6	BOLT	A193 B7
7	NUT	A194 2H
8	BONNET	A216 WCB
9	BACK SEAT RING	A276 420
10	PACKING WASHER	A276 420
11	PACKING	FLEXIBLE GRAPHITE
12	PACKING	BRAIDED GRAPHITE
13	PIN	AISI 1045
14	GLAND	A276 420
15	GLAND FLANGE	A216 WCB
16	EYEBOLT	A193 B7
17	NUT	A194 2H
18	GREASE NIPPLE	STEEL
19	STEM NUT	A439 D–2
20	RETAINING NUT	AISI 1025
21	HANDWHEEL	ASTM A536
22	HANDWHEEL NUT	AISI 1025
23	SCREW	AISI 1035
24	NAMEPLATE	A666 304
25	RIVET	A666 304

SPECIFICATION:
*BASIC DESIGN: API600
*BUTTWELDING ENDS: ASME B16.25
*FACE TO FACE: ASME B16.10

SIZE	DIXON P/N	øC	L(BW)	øB	øA	SCH NO.	Hmin	Hmax	øDo	WEIGHT	Cv
8"	D863105–800	8.00	16.50	7.98	8.78	40#	29.49	37.87	17.72	308.6 LBS.	759.8

DIXON VALVE AND COUPLING COMPANY
6525 HOMESTEAD RD., HOUSTON, TX 77028, USA
(713) 678–4291 (877) 963–4966

CAST STEEL GATE VALVE
8" CLASS 300

SIZE	DWG NO.	REV
A	D863105–800	01

5 4 3 2 1