DATA SHEET

Ball Valve Stem Extension Kit

The Right Connection®

The Dixon® ball valve stem extension kit is used when you need distance from insulated lines or need to dissipate heat or cold in your process between the valve and the handle or actuator.

NOTE: The valve, handle, and fasteners are not included.

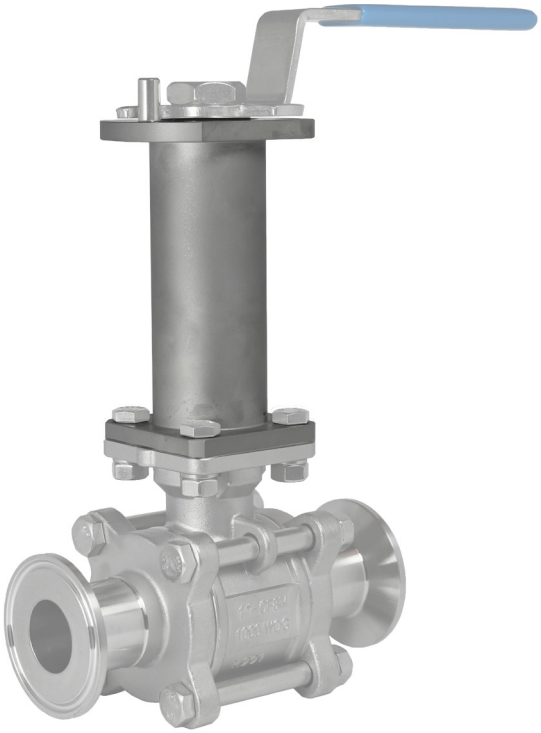

Ball Valve Stem Extension Data

Size	Extension Length	ISO5211	Stem Square (mm)	Kit Part #
1/2” - 3/4”	4”	F04	9	BV-2X-SE5075-4
1”	4”	F05	11	BV-2X-SE10-4
1-1/2” - 2”	4”	F07	14	BV-2X-SE1520-4
2-1/2” - 3”	4”	F10	17	BV-2X-SE2530-4
4”	4”	F12	22	BV-2X-SE40-4

NOTE: Refer to the bill of materials for a detailed list of included components on page 2.

Ball Valve Stem Extension Kit

Bill of Materials

Stem Kit

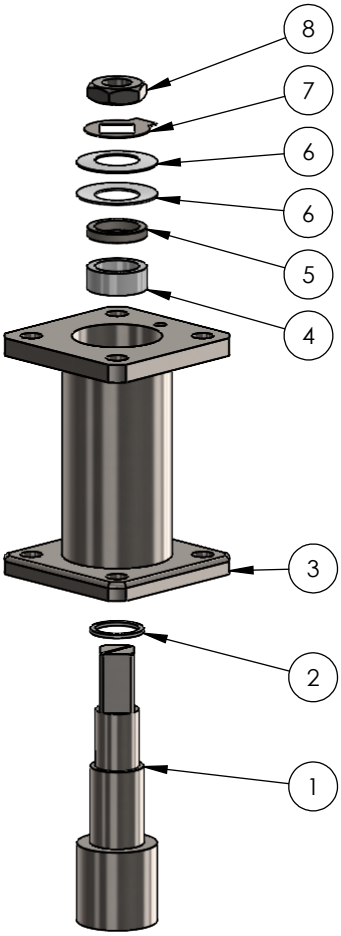

Item #	Description	Quantity
1	stem extension	1
2	thrust washer	1
3	flange 4” extension	1
4	stem packing	varies
5	gland ring	1
6	beveled washer	varies
7	locking tab washer	1
8	nut	1

© 2025 DVCC • DSBVSE_0425

• Uncommon Excellence • Uncommon Excellence • Uncommon Excellence • Uncommon Excellence • Uncommon Excellence • Uncommon Excellence • Uncommon Excellence • Uncommon

Ball Valve Stem Extension Kit

Bill of Materials

1/2” - 2”

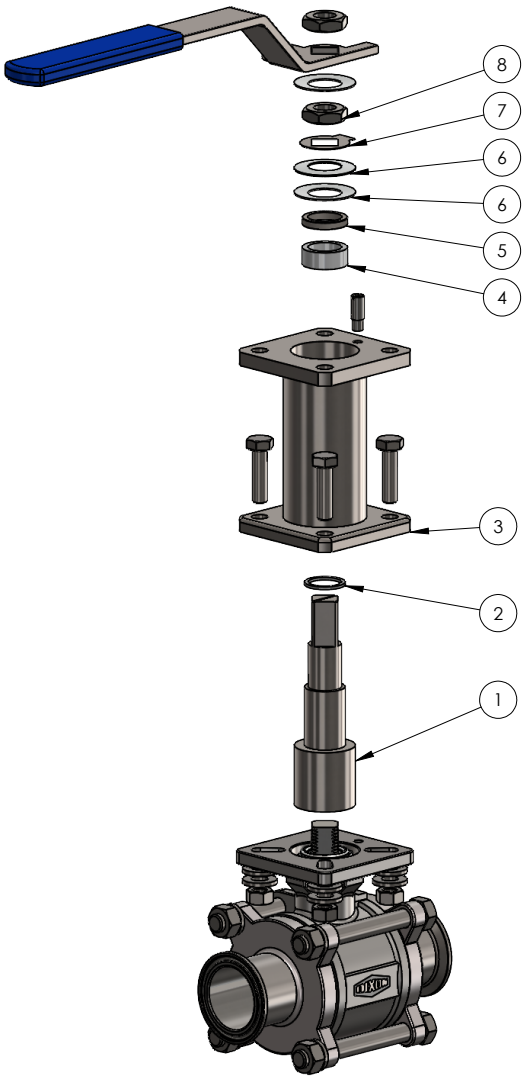

2-1/2” - 4”

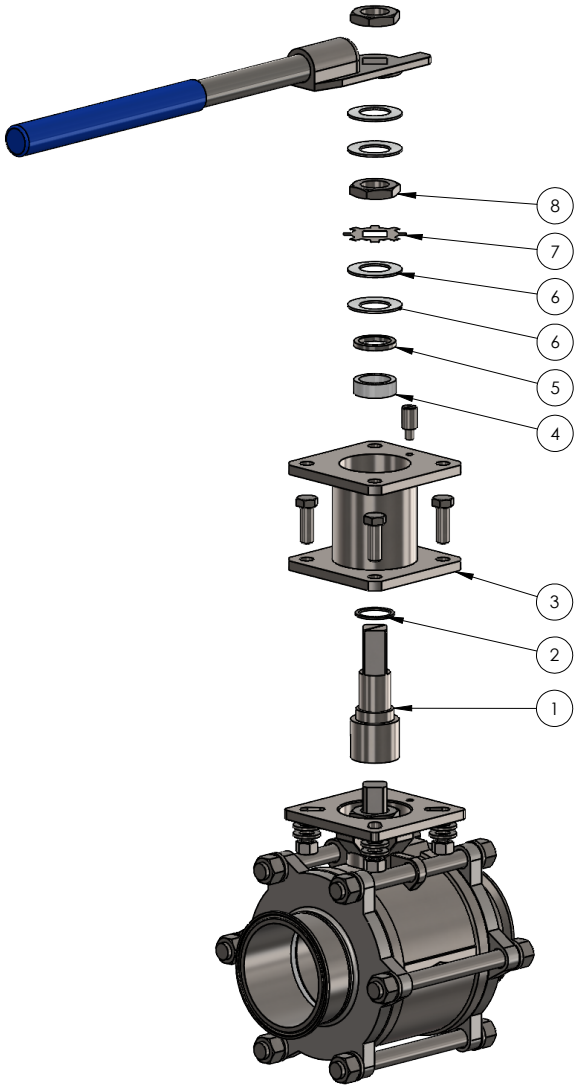

NOTE: Refer to the bill of materials for a detailed list of included components on page 2.

© 2025 DVCC • DSBVSE_0425

• Uncommon Excellence • Uncommon Excellence • Uncommon Excellence • Uncommon Excellence • Uncommon Excellence • Uncommon Excellence • Uncommon Excellence • Uncommon

Ball Valve Stem Extension Kit

Dimensions

BV2C-Series Ball Valve

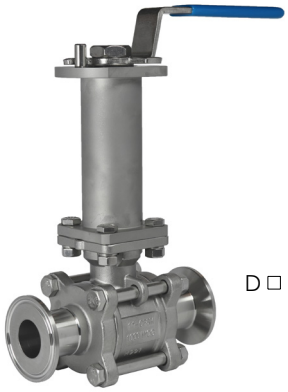

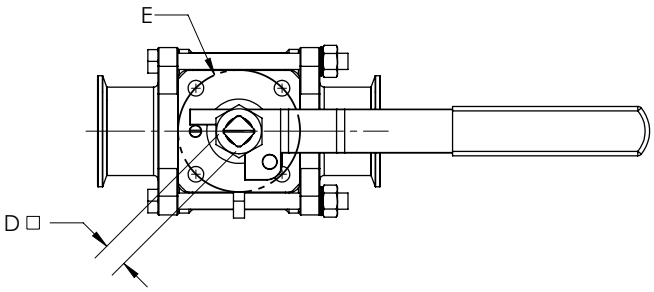

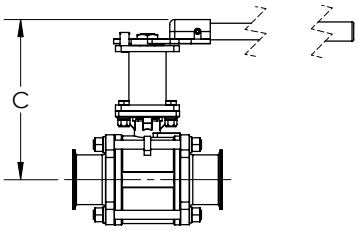

SIZES 2.5" - 4" ONLY
NTS

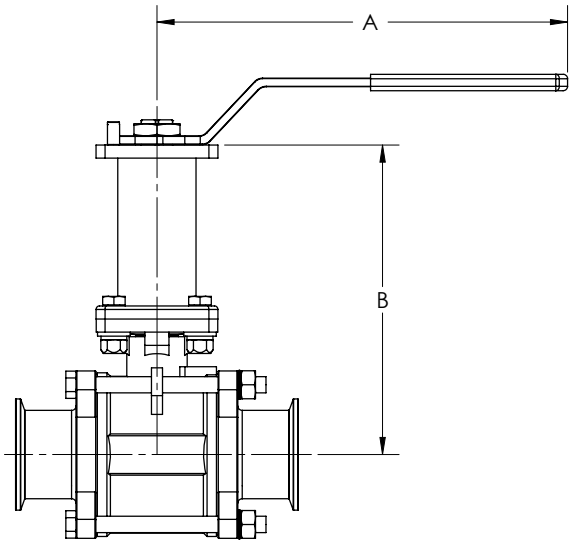

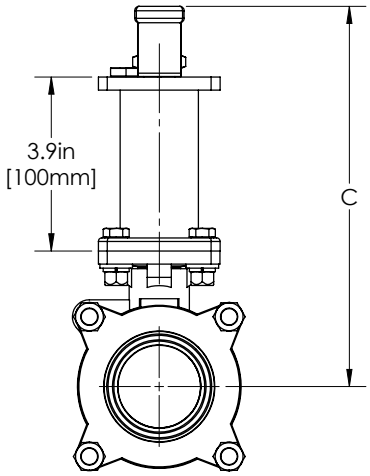

Size	A	B	C +/- .400”	D	E
1/2”	4.9”	5.5”	7.0”	-	F04
	124 mm	139 mm	178 mm	9 mm	F04
3/4”	4.9”	5.7”	7.3”	-	F04
	124 mm	145 mm	185 mm	9 mm	F04
1”	5.4”	6.0”	7.5”	-	F05
	137 mm	153 mm	190 mm	11 mm	F05
1-1/2”	9.3”	6.7”	8.3”	-	F07
	236 mm	169 mm	210 mm	14 mm	F07
2”	9.3”	7.0”	8.7”	-	F07
	236 mm	178 mm	220 mm	14 mm	F07
2-1/2”	18.0”	7.8”	9.2”	-	F10
	457 mm	198 mm	234 mm	17 mm	F10
3”	18.3”	8.1”	9.7”	-	F10
	465 mm	205 mm	247 mm	17 mm	F10
4”	18.3”	9.3”	10.9”	-	F12
	465 mm	235 mm	276 mm	22 mm	F12

© 2025 DVCC • DSBVSE_0425

• Uncommon Excellence • Uncommon Excellence • Uncommon Excellence • Uncommon Excellence • Uncommon Excellence • Uncommon Excellence • Uncommon Excellence • Uncommon

Ball Valve Stem Extension Kit

Dimensions

The Right Connection®

BV2I-Series Ball Valve

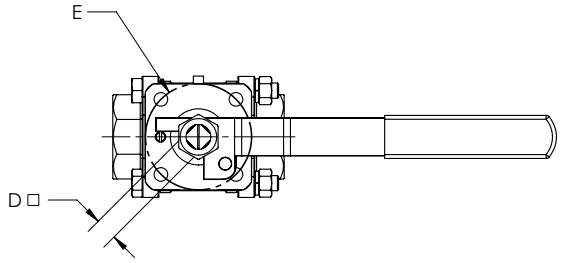

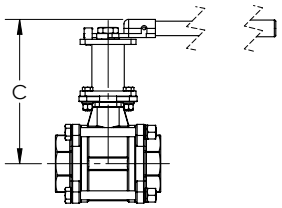

SIZES 2.5" - 4" ONLY
NTS

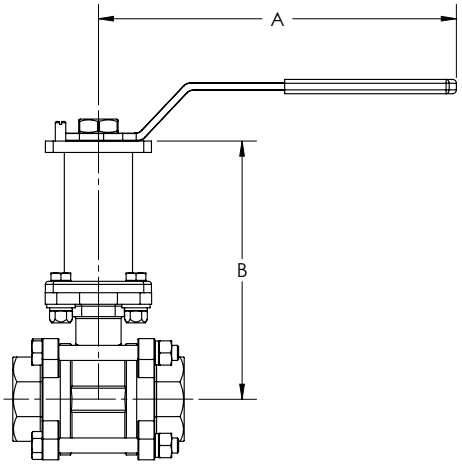

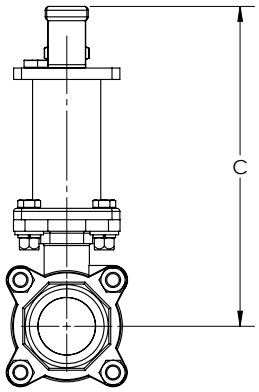

Size	A	B	C +/- .400”	D	E
1/4”	4.72”	5.46”	7.00”	-	F04
	119.9 mm	138.8 mm	177.7 mm	9 mm	F04
3/8”	4.72”	5.49”	7.02”	-	F04
	119.9 mm	139.3 mm	178.3 mm	9 mm	F04
1/2”	4.72”	5.64”	7.18”	-	F04
	119.9 mm	143.4 mm	182.3 mm	9 mm	F04
3/4”	4.72”	5.86”	7.40”	-	F04
	119.9 mm	149.0 mm	187.9 mm	9 mm	F04
1”	5.35”	6.13”	7.56”	-	F05
	135.9 mm	155.6 mm	192.1 mm	11 mm	F05
1-1/4”	5.35”	6.31”	7.74”	-	F05
	135.9 mm	160.1 mm	196.6 mm	11 mm	F05
1-1/2”	9.17”	6.70”	8.30”	-	F07
	232.9 mm	170.3 mm	210.9 mm	14 mm	F07
2”	9.17”	7.34”	8.94”	-	F07
	232.9 mm	186.5 mm	227.2 mm	14 mm	F07
2-1/2”	17.32”	8.25”	9.63”	-	F10
	439.9 mm	209.6 mm	244.6 mm	17 mm	F10
3”	17.32”	8.61”	9.99”	-	F10
	439.9 mm	218.8 mm	253.8 mm	17 mm	F10
4”	17.32”	8.48”	9.86”	-	F10
	439.9 mm	215.4 mm	250.4 mm	17 mm	F10

© 2025 DVCC • DSBVSE_0425

• Uncommon Excellence • Uncommon Excellence • Uncommon Excellence • Uncommon Excellence • Uncommon Excellence • Uncommon Excellence • Uncommon Excellence • Uncommon

Ball Valve Stem Extension Kit

Dimensions

The Right Connection®

BV3S-Series Ball Valve

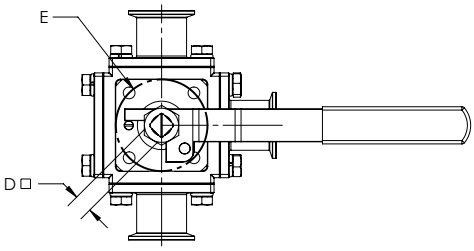

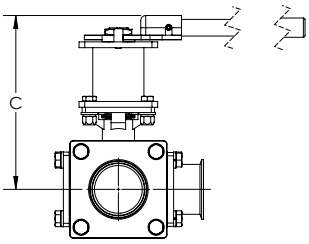

SIZES 2.5" - 4" ONLY
NTS

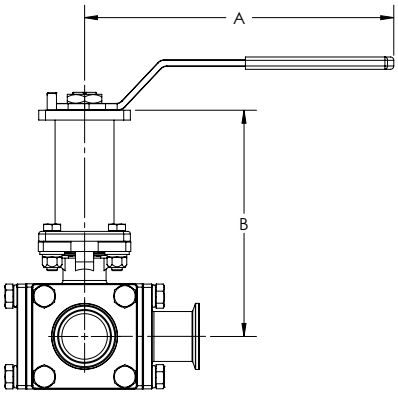

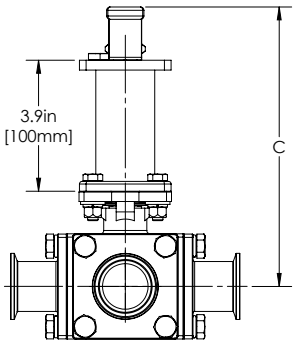

Size	A	B	C +/- .400”	D	E
1/2”	4.9”	5.67”	7.20”	-	F04
	124.5 mm	143.9 mm	182.8 mm	9 mm	F04
3/4”	4.9”	5.82”	7.36”	-	F04
	124.5 mm	147.9 mm	186.8 mm	9 mm	F04
1”	5.4”	6.27”	7.70”	-	F05
	137.2 mm	159.1 mm	195.6 mm	11 mm	F05
1-1/2”	9.3”	6.80”	8.40”	-	F07
	236.2 mm	172.7 mm	213.4 mm	14 mm	F07
2”	9.3”	7.16”	8.76”	-	F07
	236.2 mm	181.9 mm	222.5 mm	14 mm	F07
2-1/2”	18.0”	7.88”	9.26”	-	F10
	457.2 mm	200.2 mm	235.2 mm	17 mm	F10
3”	18.3”	8.87”	10.25”	-	F10
	464.8 mm	225.3 mm	260.3 mm	22 mm	F10
4”	18.3”	9.31”	10.89”	-	F12
	464.8 mm	236.4 mm	276.6 mm	22 mm	F12

Dixon Sanitary
N25 W23040 Paul Road, Pewaukee, WI 53072
ph: 800.789.1718 • email: sanitarysales@dixonvalve.com

© 2025 DVCC • DSBVSE_0425

• Uncommon Excellence • Uncommon Excellence • Uncommon Excellence • Uncommon Excellence • Uncommon Excellence • Uncommon Excellence • Uncommon Excellence • Uncommon